Direct Acting or Piloted
Aluminum Body Solenoid Valves
1/8 to 3 NPT

NC 

NO 

2/2
Series
8040
8215

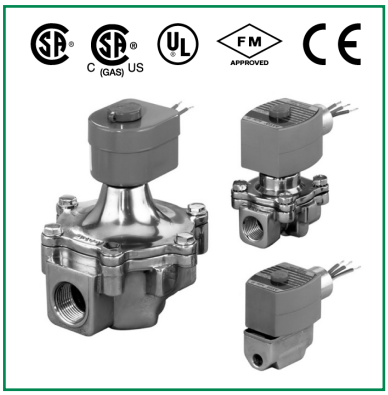

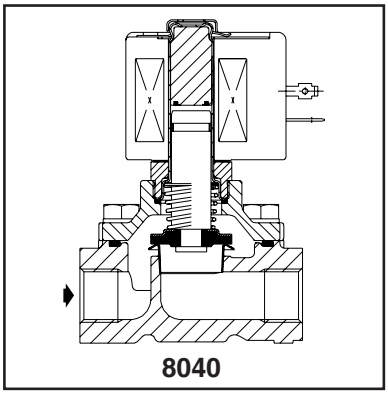

FEATURES
- *Lightweight, low-cost valves for air service*
- *Ideal for low pressure applications*
- *Provides high flow, Cv up to 138 (Kv 118)*
- *Air and vacuum service*

CONSTRUCTION

Valve Parts in Contact with Fluids	
Body	Aluminum
Seals, Diaphragms, Disc	NBR
Disc-Holder	PA (10.1 and 11.6 watt Normally Open only)
Core Guide	POM
Core Tube	305 Stainless Steel
Rider Rings	PTFE
Core and Plugnut	430F Stainless Steel
Springs*	302 Stainless Steel
Shading Coil	Copper

* For 8040H006, 8040H007, 8040H008, spring material is 17-7 PH

ELECTRICAL

Standard Coil and Class of Insulation	Watt Rating and Power Consumption				Spare Coil Part No.			
		AC			General Purpose		Explosion Proof	
	DC Watts	Watts	VA Holding	VA Inrush	AC	DC	AC	DC
F	-	6.1	16	40	238210	-	238214	-
F	11.6	10.1	25	70	238610	238710	238614	238714
F	-	16.1	35	180	272610	-	272614	-
F	15.8	15.4	27	160	99257	501695	99257	-
F	-	28.2	50	385	206409	-	206409	-

Standard Voltages: 24, 120, 240, 480 volts AC, 60 Hz (or 110, 220 volts AC, 50 Hz), 6, 12, 24, 120, 240 volts DC. Must be specified when ordering. Other voltages available when required.
(Note: 24 volt AC, 60 Hz not available with 28.2 watt coil)

SOLENOID ENCLOSURES
Standard: RedHat II - Watertight, Types 1, 2, 3, 3S, 4, and 4X; RedHat - Type I.
Optional: RedHat II - Explosionproof and Watertight, Types 3, 3S, 4, 4X, 6, 6P, 7, and 9; RedHat - Explosionproof and Raintight, Types 3, 7, and 9.
(Except EF8215A40 and EF8215A90, which are suitable for Types 3 and 7 (C and D) only and have a T2B temperature rating code.)
To order, add prefix "EF" to catalog number.

NOMINAL AMBIENT TEMP. RANGES

Series	AC	DC	
	RedHat II/RedHat	RedHat II	RedHat
8040	-40° F to 125° F (-40° C to 52° C)	-	-
8215	32° F to 125° F (0° C to 52° C)	32° F to 104° F (0° C to 40° C)	32° F to 77° F (0° C to 25° C) (104° F/40° C occasionally)

Refer to Engineering Section for details.

APPROVALS
CSA certified to
8040 Series:
1) Standard C22.2 No. 139 "Electrically Operated Valves," File 10381.
2) Automatic Gas Valves Z21.21 (6.5) C/I, File 112872.
3) Automatic Gas Safety Shutoff Valves (3.9), File 112872.

8215 Series Normally Closed:
1) Standard C22.2 No. 139 "Electrically Operated Valves," File 10381.
2) Automatic Gas Valves Z21.21 (6.5), File 112872.

8215 Series Normally Open:
1) Standard C22.2 No. 139 "Electrically Operated Valves," File 10381.

UL listed, as indicated. FM approved (Normally Closed only, except Catalog Numbers 8215A090 and 8215A040).
RedHat II meets applicable CE directives.
Refer to Engineering Section for details.

Buy: www.ValinOnline.com | Phone 844-385-3099 | Email: CustomerService@valin.com

SPECIFICATIONS

Pipe Size (in)	Orifice Size (mm)	Kv Flow Factor (m^3/h)	Gas Capacity Btu/hr ⑥	Operating Pressure Differential (bar)			Max. Fluid Temp.° F		Aluminum Body	Const. Ref.		UL ⑤ Listing	Watt Rating/ Class of Coil Insulation ②	
				Min.	Max. AC	Max. DC								
					Air-Fuel Gas	Air-Fuel Gas	AC	DC	Catalog Number	AC	DC		AC	DC
NORMALLY CLOSED (Closed when de-energized)														
1/8	7.9	0.86	53700	0	1.0	-	52	-	8040H006	11		❍	6.1/F	-
1/4	7.9	0.94	59000	0	1.0	-	52	-	8040H007	11		❍	6.1/F	-
3/8	7.9	1.0	64400	0	1.0	-	52	-	8040H008	11		❍	6.1/F	-
3/8	19	2.9	183000	0	3.4	1.7	52	40	8215G010	2		❍	10.1/F	11.6/F
3/8	19	3.0	-	0.3	8.6	8.6	52	40	8215G001 ①	1		❍	6.1/F	11.6/F
1/2	19	4.6	291000	0	0.1	-	52	-	8040G022	13A		❍	10.1/F	-
1/2	19	3.8	238500	0	3.4	1.7	52	40	8215G020	2		❍	10.1/F	11.6/F
1/2	19	4.1	-	0.3	8.6	8.6	52	40	8215G002 ①	1		❍	6.1/F	11.6/F
3/4	19	8.1	449000	0	0.1	-	52	-	8040G023	13B		❍	10.1/F	-
3/4	19	4.4	247500	0	3.4	1.7	52	40	8215G030	4		❍	10.1/F	11.6/F
3/4	19	4.4	-	0.3	8.6	8.6	52	40	8215G003 ①	3		❍	6.1/F	11.6/F
1	41	18	1119000	0	1.7	-	52	-	8215B050 ③	6		❍	15.4/F	-
1	41	18	1119000	0	1.7	1.7	52	40	8215G050 ③⑧⑨	16		❍	16.1/F	15.8/F
1 1/4	41	27	1730000	0	1.7	-	52	-	8215B060 ③	6		❍	15.4/F	-
1 1/4	41	27	1730000	0	1.7	1.7	52	40	8215G060 ③⑧⑨	16		❍	16.1/F	15.8/F
1 1/2	41	30	1900000	0	1.7	-	52	-	8215B070 ③	6		❍	15.4/F	-
1 1/2	41	30	1900000	0	1.7	1.7	52	40	8215G070 ③⑧⑨	16		❍	16.1/F	15.8/F
2	53	51	3251000	0	1.7	-	52	-	8215B080 ③	7		❍	15.4/F	-
2	53	51	3251000	0	1.7	1.0	52	40	8215G080 ③⑧⑨	17		❍	16.1/F	15.8/F
2 1/2	76	100	5821000	0	0.3	-	52	-	8215A090 ⑦	8		❍	28.2/F	-
3	76	118	7430000	0	0.3	-	52	-	8215A040 ⑦	8		❍	28.2/F	-
NORMALLY OPEN (Open when de-energized)														
3/8	19	2.74	172500	0	8.6	8.6	52	40	8215G013	9		●	10.1/F	11.6/F
1/2	19	3.4	206250	0	8.6	8.6	52	40	8215G023	9		●	10.1/F	11.6/F
3/4	19	3.9	247500	0	8.6	8.6	52	40	8215G033	10		●	10.1/F	11.6/F
1	41	19	1191750	0	1.7	-	52	-	8215C053	12		●	15.4/F	-
1	41	19	1191750	0	1.7	1.0	52	40	8215G053 ③⑧⑨	18		●	16.1/F	15.8/F
1 1/4	41	28	1793250	0	1.7	-	52	-	8215C063	12		●	15.4/F	-
1 1/4	41	28	1793250	0	1.7	1.0	52	40	8215G063 ③⑧⑨	18		●	16.1/F	15.8/F
1 1/2	41	32	1988250	0	1.7	-	52	-	8215C073	13		●	15.4/F	-
1 1/2	41	32	1988250	0	1.7	1.0	52	40	8215G073 ③⑧⑨	18		●	16.1/F	15.8/F
2	53	50	3100000	0	1.7	-	52	-	8215C083	14		●	15.4/F	-
2	53	50	3100000	0	1.7	1.0	52	40	8215G083 ③⑧⑨	19		●	16.1/F	15.8/F
2 1/2	76	100	6290000	0	0.3	-	52	-	8215B093 ④⑦	15		●	28.2/F	-

① Do not use for Fuel Gas.
② On 50 hertz service, the watt rating for the 6.1/F solenoid is 8.1 watts.
③ FM Approved Process Control Valves. See Engineering Section (Approvals) for details, RedHat II AC version have no CSA. UL. FM.
④ Type 1 enclosure only.
⑤ ❍= Safety Shutoff Valve; ●= General Purpose Valve. Refer to Engineering Section (Approvals) for details.
⑥ 1" W.C. Drop @ 2" W.C. Inlet Pressure, 1,000 Btu/cu.ft. or more, 0.64 Specific Gravity Gas.
⑦ Not available with 24 volt, 60 Hz coil.
⑧ H Class coil option.
⑨ Not available with 6 VDC coil.

Buy: www.ValinOnline.com | Phone 844-385-3099 | Email: CustomerService@valin.com

DIMENSIONS: (MM)

Const. Ref.	H	K	L	P	W
1	87	51	70	73	63
2	102	63	70	88	63
3	98	56	84	77	59
4	113	68	84	92	59
6 ①	174	108	127	142	137
7 ①	190	115	155	151	160
8 ①	260	146	198	201	202
9	112	69	70	98	60
10	123	69	84	103	60
11	69	36	51	58	43
12	174	56	127	92	137
13	174	55	127	90	137
13A	103	63	70	87	62
13B	114	67	84	92	61
14 ②	189	61	155	97	160
15 ②	260	78	198	133	202
16	171	111	127	139	137
17	186	120	155	148	160
18 ②	171	60	121	89	137
19 ②	187	66	155	95	161

IMPORTANT:
Valves may be mounted in any position except all DC constructions and those marked ①, which must be mounted with the solenoid vertical and upright. Constructions marked ② must be mounted with the solenoid vertical and upright or horizontal only.

Const. Ref. 1-4, 9, 10, 13A, 13B

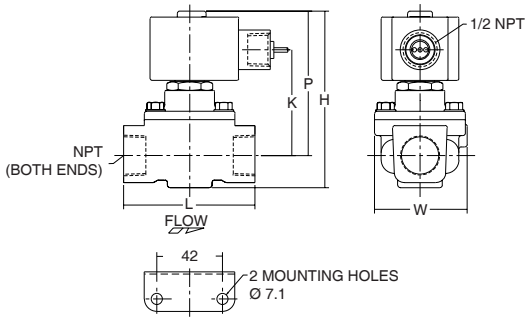

Const. Ref. 6, 7, 8

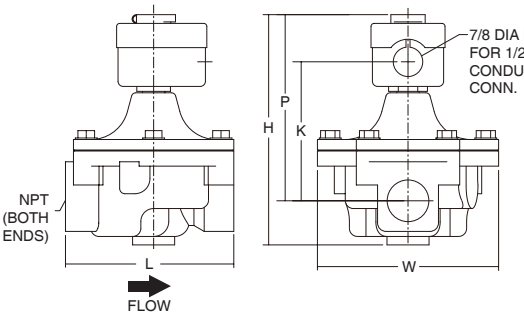

Const. Ref. 16, 17

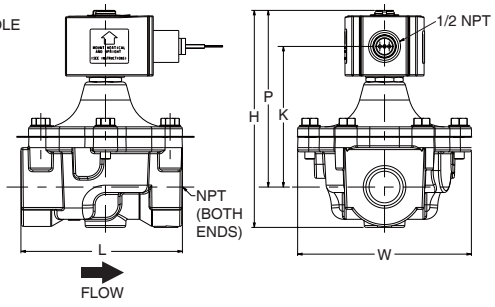

Const. Ref. 11

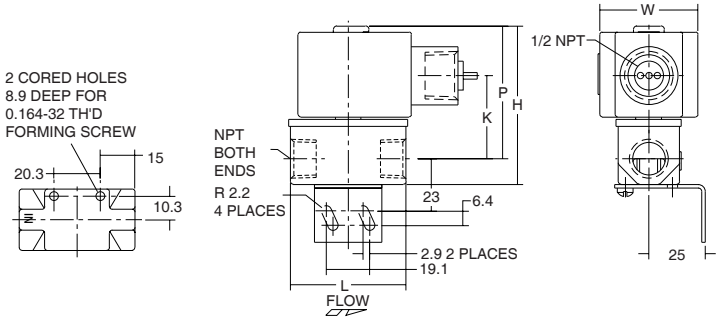

Const. Ref. 12-15

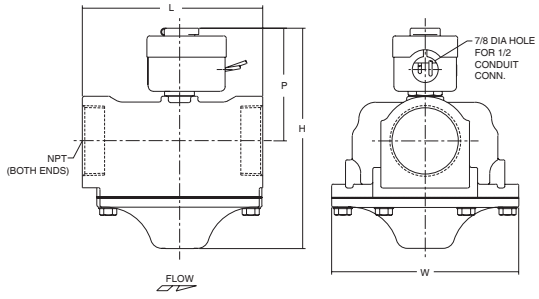

Const. Ref. 18-19

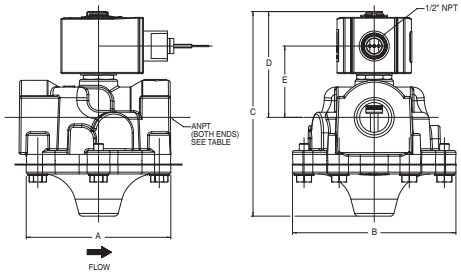

APC-8040/8215-2015/R1.0
Availability, design and specifications are subject to change without notice. All rights reserved.

Buy: www.ValinOnline.com | Phone 844-385-3099 | Email: CustomerService@valin.com